VOGUE

Pre-Rinse for Vogue Installation instructions

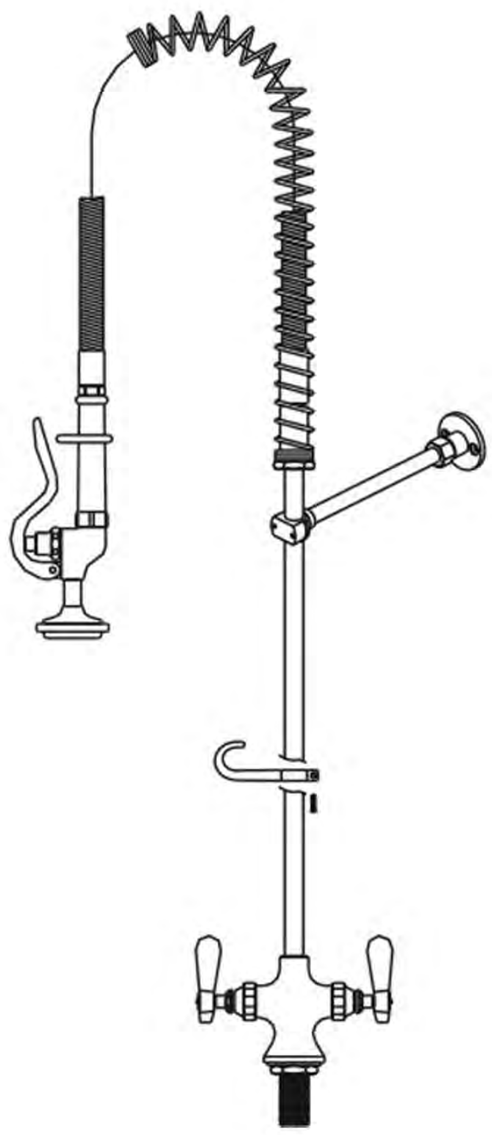

CE984 / DL831

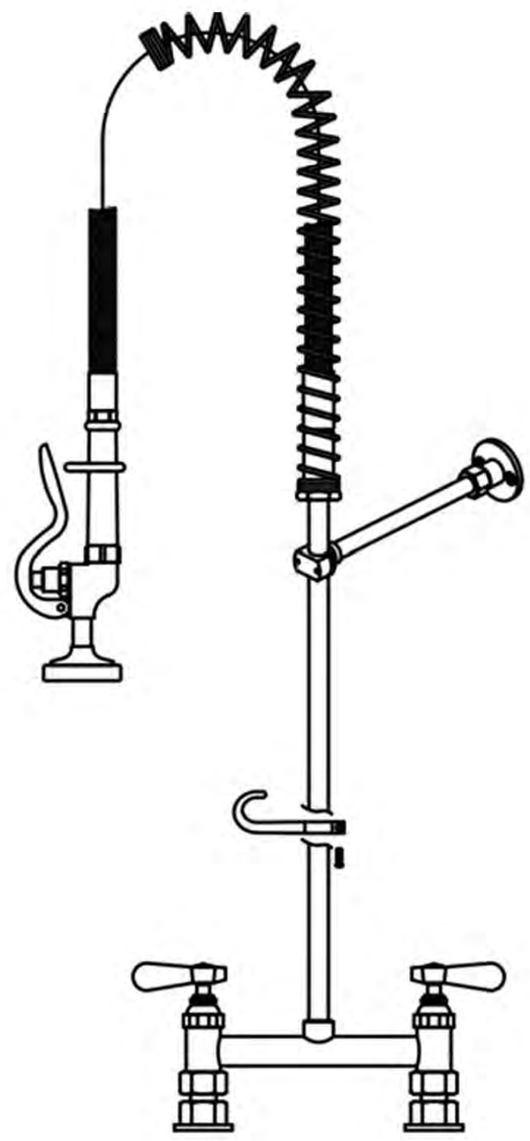

CE985 / DL832

WRAS Certificate No.:09073316/097317/1206015/1206017

VOGUE,Fourth Way.Avonmouth,Bristol BS11 8TB.UK

08451462887

ATTENTION PLUMBERS:TYPICAL MOUNTING INSTRUCTIONS FOR:

CE985 / DL832

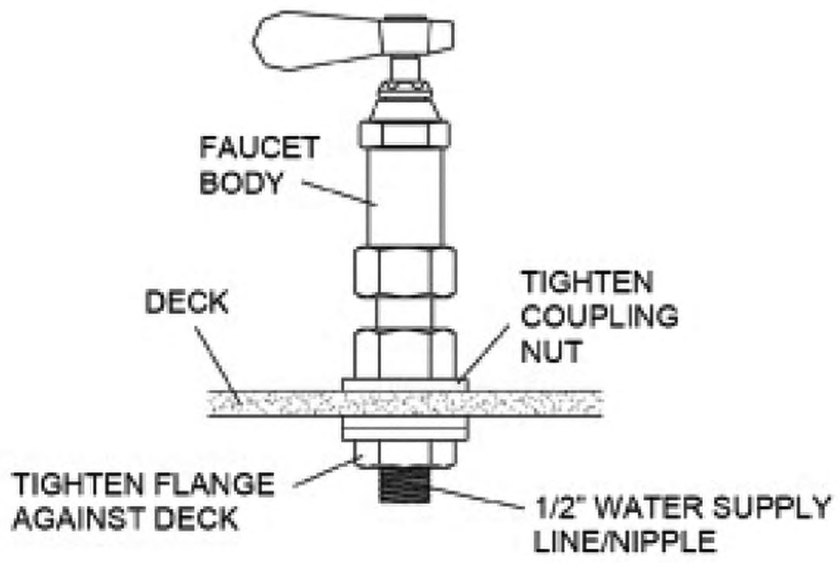

CE984 / DL831

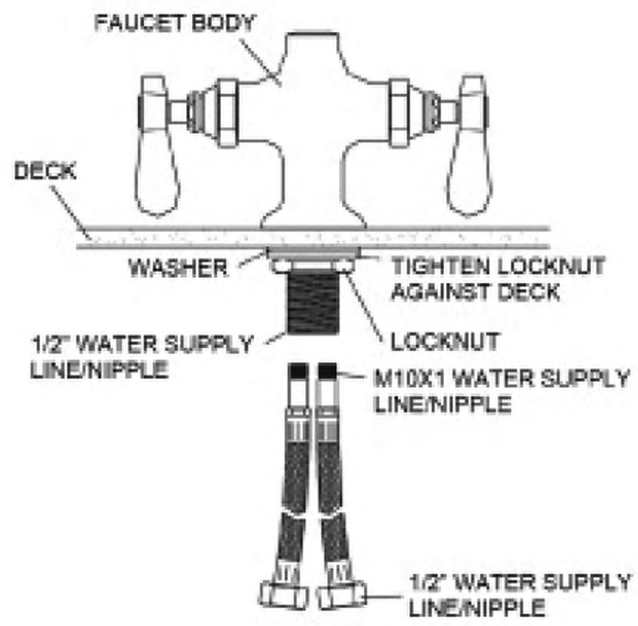

GENERAL INSTRUCTIONS:

Thank you for purchasing one of our quality plumbing products. Most faucets are supplied with mounting hardware, including 1/2" nipples.For installation instructions we will assume that hot and cold water supplies end in 1/2" nipples. We recommend using a 1-1/8" hole in the deck or backsplash to accommodate the 1/2" supply nipples.

1. Turn off water supply at main source.
2. Hand tighten all parts prior to tightening with wrench.Do not force parts together.
3. Handle plated surfaces with care, being careful not to scratch with tool.
4. Do not force parts together.

ASSEMBLE COUPLINGS TO SINK DECK Apply Teflon Tape or Pipe Joint Compound to the supply line nipples.Place nipples through holes in deck. Assemble flange of each coupling to one nipple ,then the other.Thread flange loosely against wall or backsplash.

ASSEMBLE FAUCET TO COUPLINGS Carefully orient, mount and hand tighten the faucet to the two coupings.Be sure to include the washers provilded. Use wrench to tighten flange against wall or backsplash. (Maintain alignment of faucet to sink while tightening). Now Wrench tighten couplings to faucet body, tighten flange against sink/backsplash.

PRE-RINSER ASSEMBLY

1.ASSEMBLE SPRAY HEAD HOOK TO RISER

Spread (open) Clamp section of Hook so it will slide over Riser without marring finish of Riser. Orient Spray Head Hook with hook up and assemble to Riser.Place approximately one-half down length of Riser DO not tighten at this time.

2.ASSEMBLE WALL BRACKET

Model No.98-WB (Only applicable to model CE985/CE984)

Determine correct length of Supprt Rod from Wall to Riser Pipe. Cut Rod to approximate size. Affix Wall Bracket Base securely to Wall. Install Compression Nut and Brass Ferrule and tighten securely

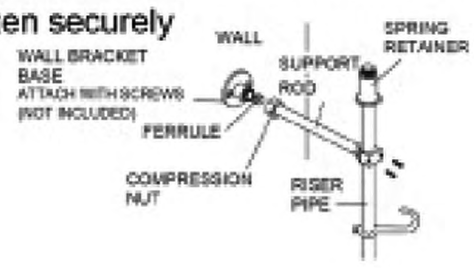

3.ASSEMBLE PRE-RINSE WITH GOOSENECK SPRING

a. Assemble Spring Retainer to Riser Pipe and tighten with Wrench. This will also tighten Riser Pipe on Faucet Body
b. Insure O-ring is in place inside of Hose Coupling prior to assembly.(Refer to drawing #1 below). Additional O-Ring are provided for future use.
c. Assemble Large Coil Spring over Hose and onto Spring Retainer.IMPORTANT:Spring must be assembled vertically with large curve of spring to the top.
d. Assemble Spray Head Ring over Spray Head Grip, And assemble Spray Head Assembly to Hose, tighten with Wrench. Insure O-Ring is in place prior to assembling. (Refer to drawing #2 below). Note:Additional O-Rings are provided in a plastic bag. Realign Spray Head Hook on Riser and tighten. Tighten all Wall Bracket Screws. Turn on water and check for leaks.

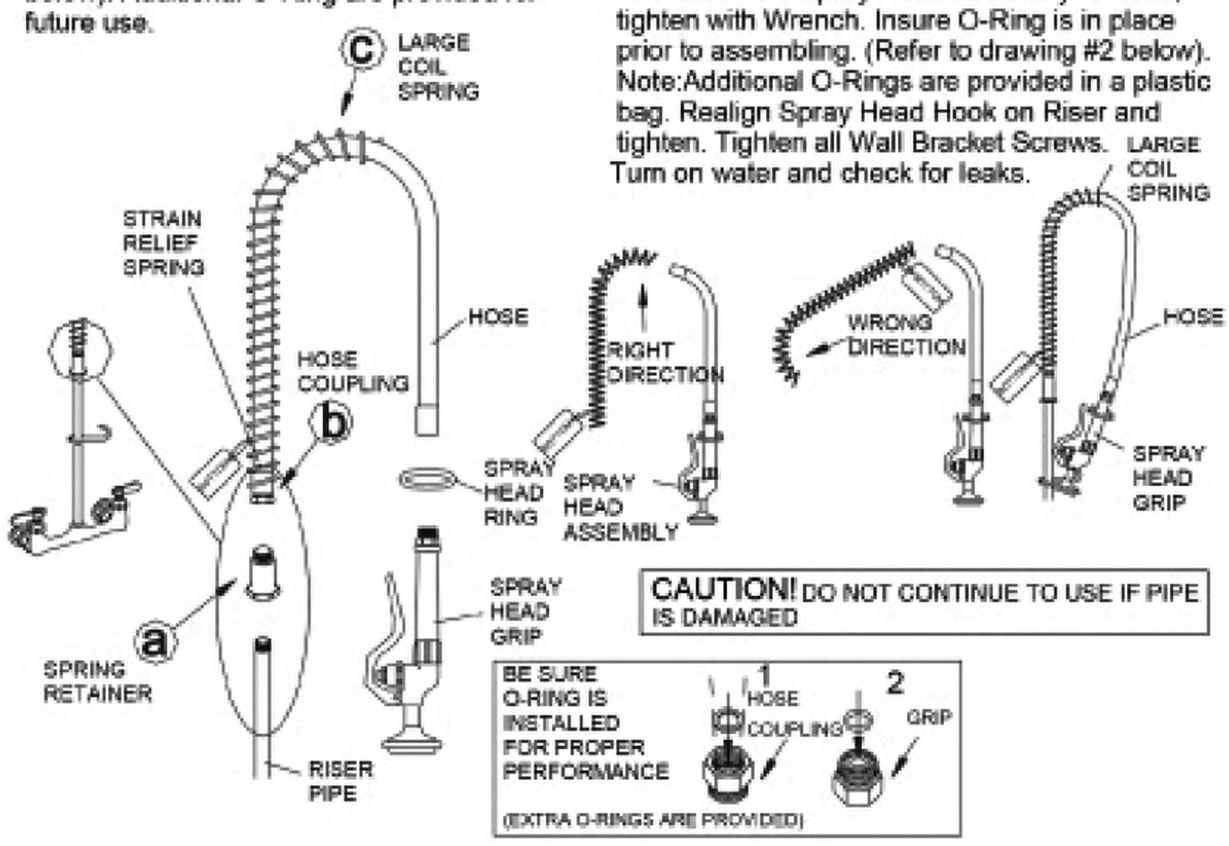

CAUTION! DO NOT CONTINUE TO USE IF PIPE IS DAMAGED

4.ASSEMBLE PRE-RINSE WITH SWIVEL ARM

a. Follow instrucions above (#1) and (#1A) connecting Riser Pipe to Faucet Body.
b. Secure Swivel Arm Spout to Riser Pipe and tighten.
c. Install Wall Bracket #98001-Y020 Refer to assembly Instruction (#3) above.

CAUTION! MANUFACTURER RECOMMENDS THE USE OF WALL BRACKET ASSEMBLY TO SECURE RISER PIPE ON ALL PRE-RINSE ASSEMNLIES.

NOTE: WALL BRACKET SHOULD BE LOCATED TOP OF RINSE PIPE...AS CLOSE AS POSSIBLE TO SPRING RETAINER

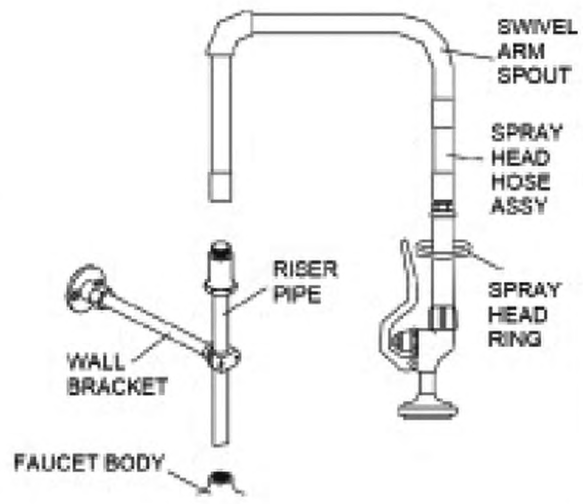

5.ASSEMBLE(OPTIONAL) SWIVEL ARM SUPPORT BRACKET
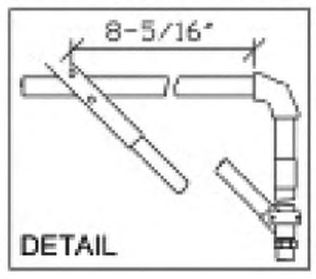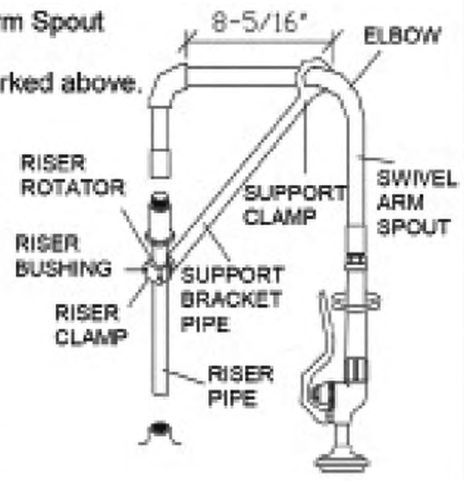
a. Measure and mark 8-5/16" from inside Elbow toward Swivel Arm Spout (see detail).
b. Tighten Support Clamp on Swivel Arm Support at the point marked above.
c. Tighten Screw in Support Clamp onto Support Bracket Pipe.
d. Position bottom of Support Bracket Pipe onto Riser Pipe and tighten Screws (2) on Riser Rotator around Support Bracket Pipe and Riser (it will be loose around the Riser Pipe).
e. Slide Riser Bushing around Riser Pipe and into Riser Rotator.
f. Assemble Riser Clamp around Riser with Screws (2).Slide up to meet bottom of Bushing.Push up until Spout is level,tighten all Screws securely.