Mod./Type:	_70/... CPES _90/... CPES	cod./num.	2532163.00
		data/date:	06/02/2015

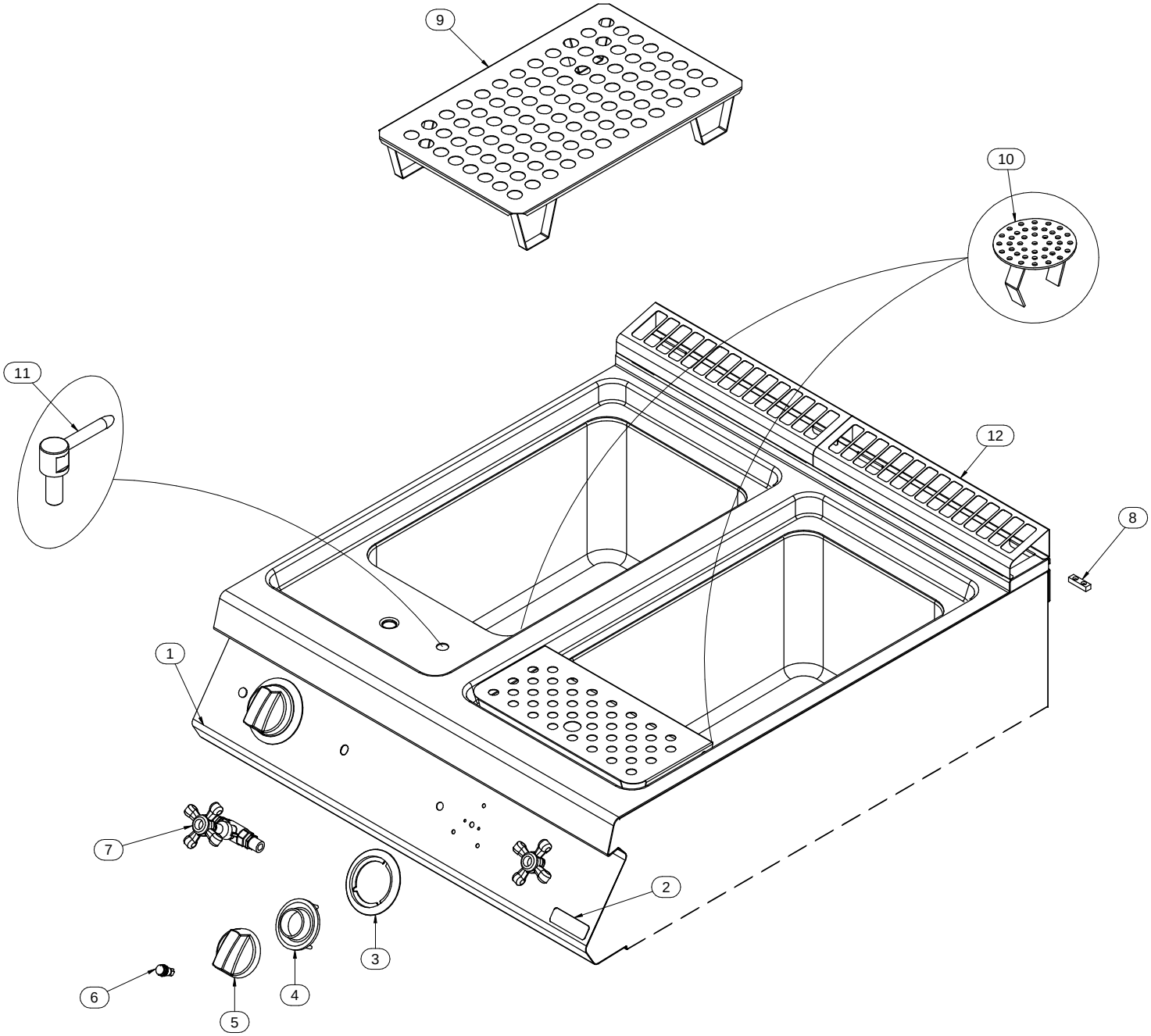

Mod.:	_70/... CPES _90/... CPES			cod. / num. 2532164.00 data / date 06/02/2015 rif. / ref. 2532163.00		PK70/40 CPES	PK70/80 CPES	PK90/40 CPES	PK90/80 CPES	NOTE
POS.	DESCRIZIONE	DESCRIPTION	DENOMINATION	BENENNUNG	COD.	Q. ty				
1	CRUSCOTTO	CONTROL PANEL	BANDEAU	BEDIENBLENDE	9111598.00	1		1		
					9111599.00		1		1	
2	MARCHIO	BRAND NAME	MARQUE	MARKENZEICHEN	682.008.00	1	1	1	1	
3	SERIGRAFIA	SCREEN PRINT	SÉRIGRAPHIE	SIEBDRUCK	910.169.00	1	2	1	2	
4	LABIRINTO	LABYRINTH	LABYRINTHE	LABYRINTH	256.218.00	1	2	1	2	
5	MANOPOLA	KNOB	BOUTON	DREHKNOPF	951.071.00	1	2	1	2	
6	LAMPADA SPIA ARANCIO	ORANGE INDICATOR LIGHT	LAMPE TEMOIN ORANGE	ORANGE KONTROLLAMPE	963.013.00	1	2	1	2	
7	RUBINETTO	TAP	ROBINET	WASSERHAHN	678.065.25	1	2	1	2	
8	PIASTRINA GIUNZIONE	FIXING PLATE	PLAQUETTE FIXAGE	BEFESTIGUNGSPLATTE	941.130.00	1	1	1	1	
9	FALSOFONDO	FALSE BOTTOM	FAUX-FOND	ABTROPFPLATTE	6111186.15	1	2			
					911.758.15			1	2	
10	FILTRO SCARICO	EXHAUST FILTER	FILTRE D'ECHAPPEMENT	ABLAUFFILTER	611.266.00	1	2	1	2	
11	EROGATORE	DISTRIBUTOR	AJUTAGE	SPRÜHDOSE	256.313.00	1	2	1	2	
12	GRIGLIA CAMINO	FLUE GRIDDLE	GRILLE POUR CHEMINÉE	KAMINROST	9211777.00	1	2	1	2	
13										
14										
15										
16										
17										
18										
19										
20										
21										
22										
23										
24										
25										
26										
27										
28										
29										
30										
31										
32										
33										
34										

Mod./Type: **_70/... CPES - _90/... CPES**

SIMPLE

cod./num. 2531849.00

data/date: 09/09/2014

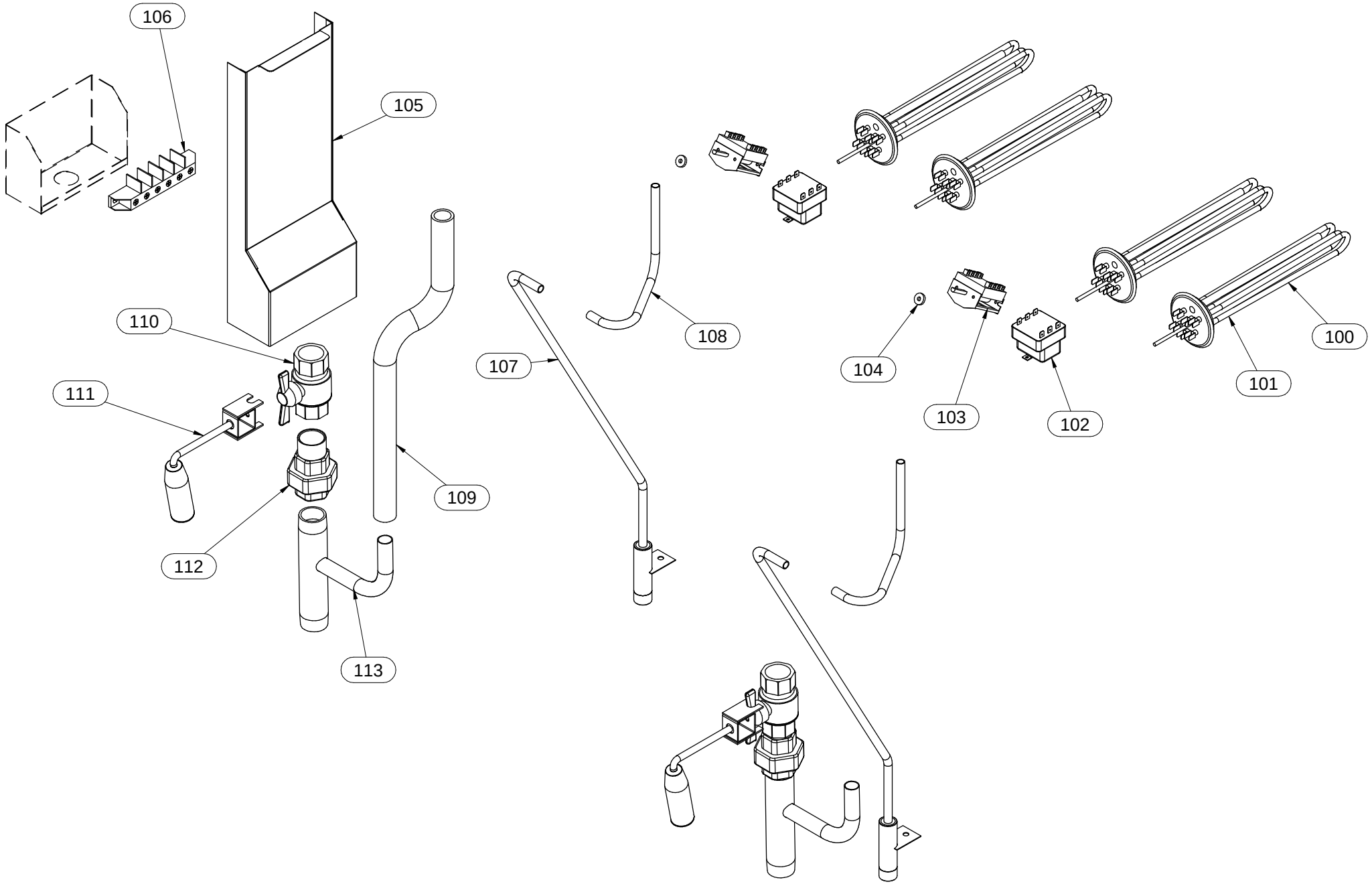

Mod.:	_70/... CPES - _90/... CPES SIMPLE			cod. / num. 2531850.00 data / date 09/09/2014 rif. / ref. 2531849.00		_70/40 CPES	_70/80 CPES	_90/40 CPES	_90/80 CPES	NOTE	
POS.	DESCRIZIONE	DESCRIPTION	DENOMINATION	BENENNUNG	COD.	Q. ty					
100	RESISTENZA	HEATING ELEMENT	RESISTANCE	HEINZELEMENT	665.074.15	2	4	-	-		
101	RESISTENZA	HEATING ELEMENT	RESISTANCE	HEINZELEMENT	665.074.15	-	-	2	4	**FROM: 15.12.2011**	**TO: 30.09.2013**
					665.103.00	-	-	2	4	**FROM: 01.10.2013**	**TO:...**
102	TERMOSTATO SICUREZZA	SAFETY THERMOSTAT	THERMOSTAT DE SECURITÉ	TEMPERATURBEGRENZER	661.051.00	1	2	1	2		
103	COMMUTATORE	CHANGE-OVER SWITCH	COMMUTATEUR	UMSCHALTER	661.037.00	1	2	1	2		
104	GUARNIZIONE	WASHER	GUARNITURE	DICHTUNGSRING	953.020.00	1	2	1	2		
105	PROTEZIONE	PROTECTION	PROTECTION	SCHUTZ	9221238.00	1	1	1	1	**FROM: 15.12.2011**	**TO: 30.01.2014**
					9221238.13	1	1	1	1	**FROM: 01.02.2014**	**TO:...**
106	MORSETTIERA	TERMINAL BOARD	BORNES	KLEMMENBRETT	663.036.00	1	1			**FROM: 15.12.2011**	**TO: 30.01.2014**
					663.018.00			1	1	**FROM: 15.12.2011**	**TO: 30.01.2014**
					M566050000	1	1	1	1	**FROM: 01.02.2014**	**TO:...**
107	TUBO CARICO	INLET HOSE	TUYAU DE CHARGEMENT	BELASTUNG-ROHR	256.312.00	1	2	1	2		
108	TUBO EROGATORE	REGULATOR PIPE	TUYEAU REGULATOR	WASSERLAST	256.311.00	1	2	1	2		
109	SCARICO TROPPOPIENO	OVERFLOW WATER OUTLET	VIDANGE DU TROP-PLEIN	ABLAUF DES ÜBERLAUFS	0831.2026.00	0,8	1,5	0,8	1,5	U. M. metri	U. M. meters
110	VALVOLA	VALVE	SOUPAPE	VENTIL	678.014.00	1	2	1	2		
111	MANIGLIA	HANDLE	POIGNÉE	HANDGRIFF	256.310.00	1	2	1	2		
112	RACCORDO	CONNECTOR	RACCORD	ANSCHLUSS	0716.10080.0	1	2	1	2		
113	TUBO SCARICO	EXHAUST PIPE	TUYAU D'ÉCHAPPEMENT	ABLAUFROHR	611.264.00	1	2	1	2		
114											
115											
116											
117											
118											
119											
120											
121											
122											
123											
124											
125											
126											
127											
128											
129											
130											
131											
132											
133											