| | | | |
|---|---|---|---|
| Mod./Type: | _70/... FRE ...X<br>_90/... FRE ...X | cod./num. | 2532171.00 |
| | | data/date: | 04/05/2015 |

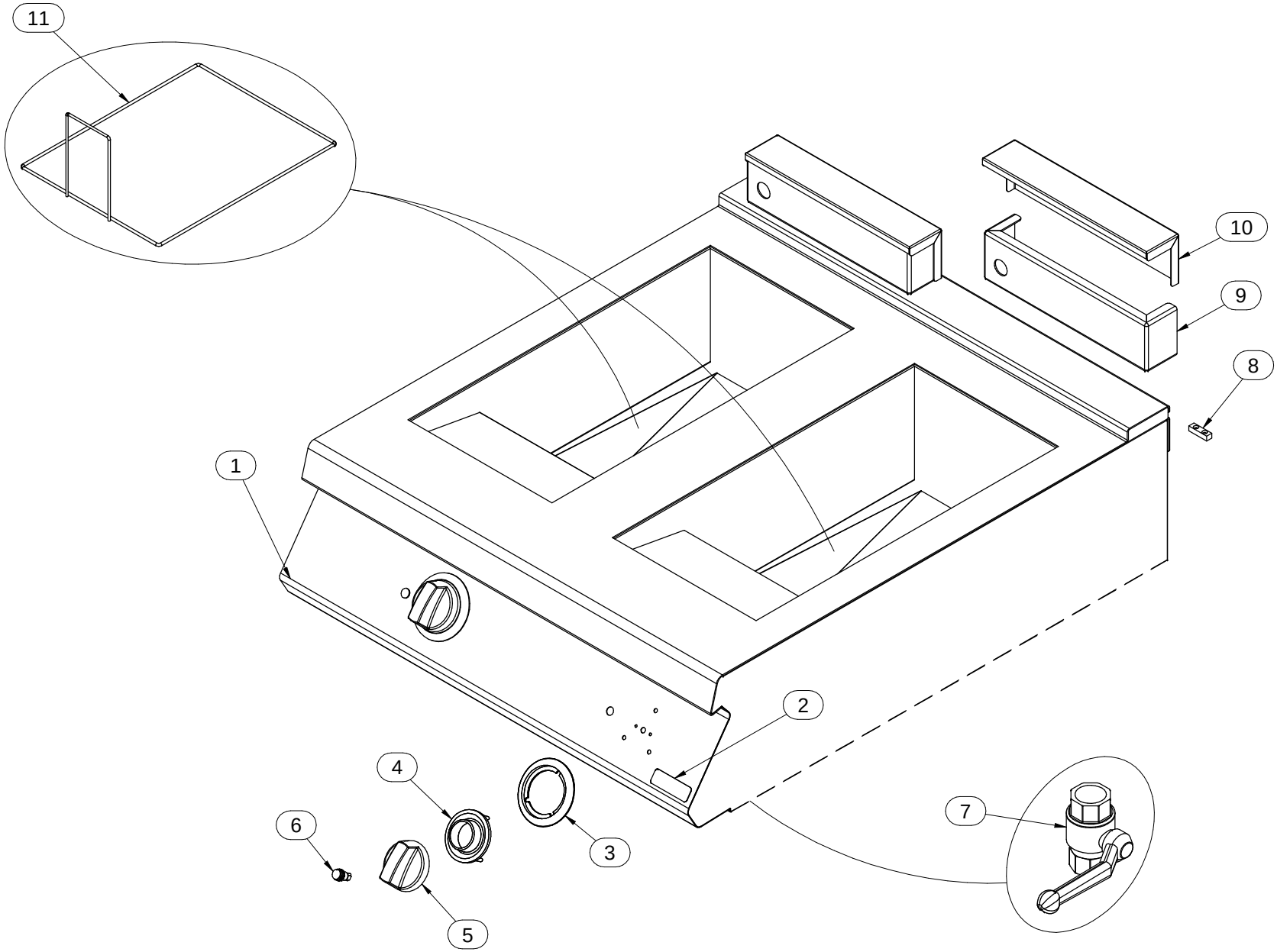

| Mod.: | _70/… FRE …X<br>_90/… FRE …X | | | cod. / num. 2532172.00<br>data / date 04/05/2015<br>rif. / ref. 2532171.00 | | PK70/40 FRE 10X | PK70/80 FRE 10X | PK90/40 FRE 15X | PK90/80 FRE 15X | NOTE |
|---|---|---|---|---|---|---|---|---|---|---|
| POS. | DESCRIZIONE | DESCRIPTION | DENOMINATION | BENENNUNG | COD. | Q. ty | | | | |
| 1 | CRUSCOTTO | CONTROL PANEL | BANDEAU | BEDIENBLENDE | 9111555.00 | 1 | | 1 | | |
| | | | | | 9111556.00 | | 1 | | 1 | |
| 2 | MARCHIO | BRAND NAME | MARQUE | MARKENZEICHEN | 682.008.00 | 1 | 1 | 1 | 1 | |
| 3 | SERIGRAFIA | SCREEN PRINT | SÉRIGRAPHIE | SIEBDRUCK | 910.174.00 | 1 | 2 | 1 | 2 | |
| 4 | LABIRINTO | LABYRINTH | LABYRINTHE | LABYRINTH | 256.218.00 | 1 | 2 | 1 | 2 | |
| 5 | MANOPOLA | KNOB | BOUTON | DREHKNOPF | 951.071.00 | 1 | 2 | 1 | 2 | |
| 6 | LAMPADA SPIA ARANCIO | ORANGE INDICATOR LIGHT | LAMPE TEMOIN ORANGE | ORANGE KONTROLLAMPE | 963.013.00 | 1 | 2 | 1 | 2 | |
| 7 | VALVOLA | VALVE | SOUPAPE | VENTIL | 678.007.00 | 1 | 2 | 1 | 2 | |
| 8 | PIASTRINA GIUNZIONE | FIXING PLATE | PLAQUETTE FIXAGE | BEFESTIGUNGSPLATTE | 941.130.00 | 1 | 1 | 1 | 1 | |
| 9 | ALZATINA | UPSTAND | DOSSERET | AUFKANTUNG | 6211990.00 | 1 | 2 | 1 | 2 | |
| 10 | COPERCHIO | LID | COUVERCLE | DECKEL | 6211991.00 | 1 | 2 | 1 | 2 | |
| 11 | FILTRO | FILTER | FILTER | FILTER | 683.001.23 | 1 | 2 | | | |
| | | | | | 983.010.00 | | | 1 | 2 | |
| 12 | | | | | | | | | | |
| 13 | | | | | | | | | | |
| 14 | | | | | | | | | | |
| 15 | | | | | | | | | | |
| 16 | | | | | | | | | | |
| 17 | | | | | | | | | | |
| 18 | | | | | | | | | | |
| 19 | | | | | | | | | | |
| 20 | | | | | | | | | | |
| 21 | | | | | | | | | | |
| 22 | | | | | | | | | | |
| 23 | | | | | | | | | | |
| 24 | | | | | | | | | | |
| 25 | | | | | | | | | | |
| 26 | | | | | | | | | | |
| 27 | | | | | | | | | | |
| 28 | | | | | | | | | | |
| 29 | | | | | | | | | | |
| 30 | | | | | | | | | | |
| 31 | | | | | | | | | | |
| 32 | | | | | | | | | | |
| 33 | | | | | | | | | | |
| 34 | | | | | | | | | | |
| 35 | | | | | | | | | | |
| 36 | | | | | | | | | | |

| Mod./Type: | _70/... FRE...X<br>_90/... FRE...X | cod./num. | 2531921.00 |
|---|---|---|---|
| | | data/date: | 26/11/2014 |

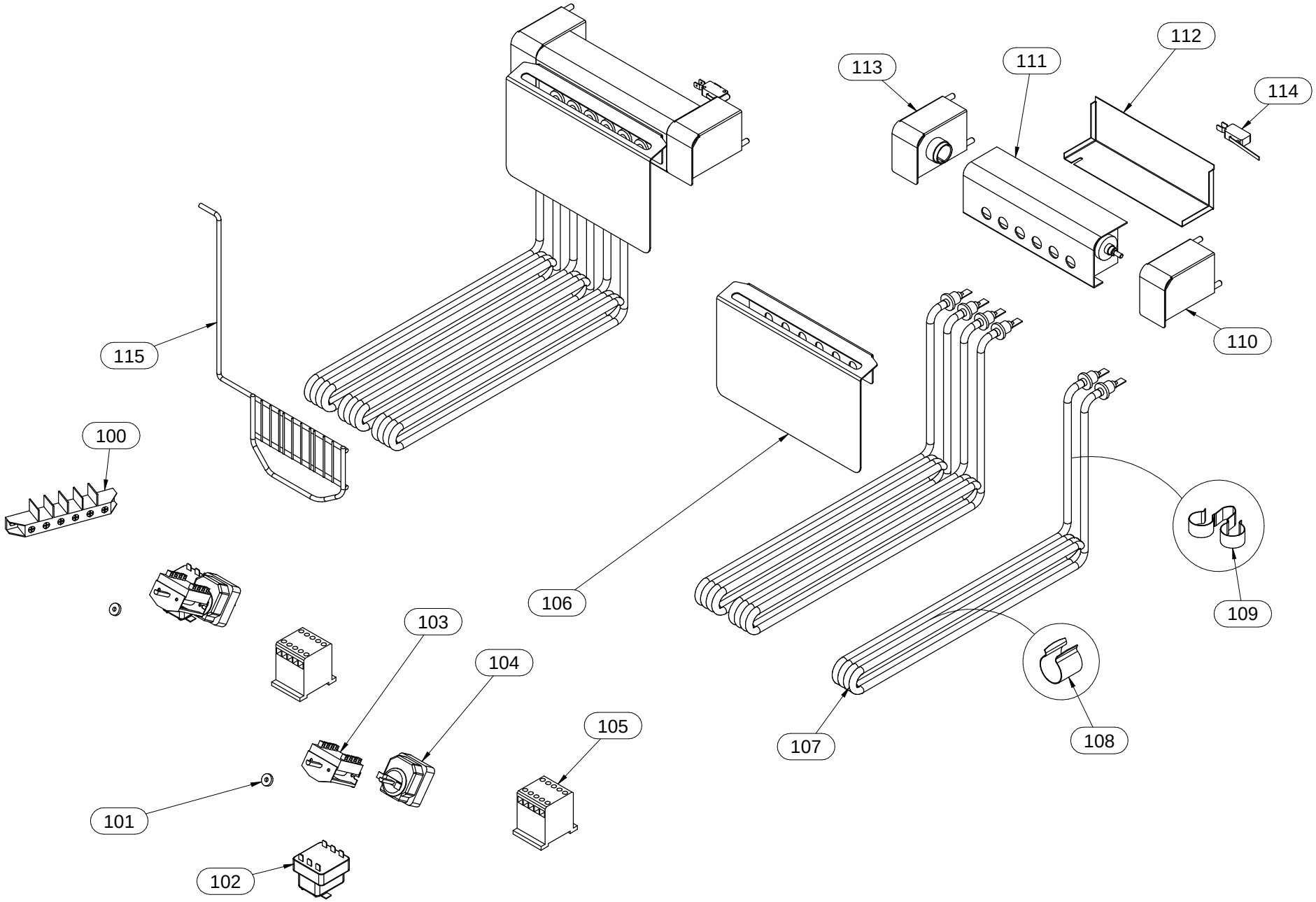

| Mod.: | _70/… FRE…X<br>_90/… FRE…X | | | cod. / num. 2531922.00<br>data / date 27/11/2014<br>rif. / ref. 2531921.00 | | _70/40 FRE10X | _70/80 FRE10X | _90/40 FRE15X | _90/80 FRE15X | NOTE |
|---|---|---|---|---|---|---|---|---|---|---|
| POS. | DESCRIZIONE | DESCRIPTION | DENOMINATION | BENENNUNG | COD. | Q.ty | | | | |
| 100 | MORSETTIERA | TERMINAL BOARD | BORNES | KLEMMENBRETT | 963.007.00 | 1 | 1 | 1 | 1 | |
| 101 | GUARNIZIONE | WASHER | GUARNITURE | DICHTUNGSRING | 953.020.00 | 1 | 2 | 1 | 2 | |
| 102 | TERMOSTATO SICUREZZA | SAFETY THERMOSTAT | THERMOSTAT DE SECURITÉ | TEMPERATURBEGRENZER | 661.048.00 | 1 | 2 | 1 | 2 | |
| 103 | COMMUTATORE | CHANGE-OVER SWITCH | COMMUTATEUR | UMSCHALTER | 661.000.00 | 1 | 2 | 1 | 2 | |
| 104 | TERMOSTATO | THERMOSTAT | THERMOSTAT | THERMOSTAT | 661.041.00 | 1 | 2 | 1 | 2 | |
| 105 | CONTATTORE | CONTACTOR | CONTACTEUR | FERNSCHALTER | 461.021.00 | 1 | 2 | 1 | 2 | |
| 106 | PROTEZIONE | PROTECTION | PROTECTION | SCHUTZ | 6211992.00 | 1 | 2 | | | |
| | | | | | 9211634.00 | | | 1 | 2 | |
| 107 | RESISTENZA | HEATING ELEMENT | RESISTANCE | HEINZELEMENT | 665.089.00 | 3 | 6 | | | |
| | | | | | 965.009.00 | | | 3 | 6 | |
| 108 | CLIPS BULBO | BULB CLIPS | CLIPS DU BULB | CLIPS GLÜHBIRNE | 238.003.00 | 4 | 8 | 4 | 8 | |
| 109 | CLIPS CAPILLARE | CAPILLARY CLIPS | CLIPS CAPILLAIRE | CLIPS KAPILLARE | 238.002.00 | 3 | 6 | 3 | 6 | |
| 110 | COLONNINA DESTRA | RIGHT COLUMN | COLONNE DE DROITE | LINKE SÄULE | 256.420.00 | 1 | 2 | 1 | 2 | |
| 111 | SUPPORTO RESISTENZE | HEATING ELEMENTS SUPPORT | SUPPORT ÉLÉMENTS CHAUFFANTS | HEIZELEMENTE TRÄGER | 256.419.00 | 1 | 2 | 1 | 2 | |
| 112 | PROTEZIONE | PROTECTION | PROTECTION | SCHUTZ | 621.106.00 | 1 | 2 | 1 | 2 | |
| 113 | COLONNINA SINISTRA | LEFT COLUMN | COLONNE DE GAUCHE | RECHTE SÄULE | 611.042.00 | 1 | 2 | 1 | 2 | |
| 114 | MICROINTERRUTTORE | MICROSWITCH | MICROINTERRUPTEUR | SICHERUNGSSCHALTER | 761.004.00 | 1 | 2 | 1 | 2 | |
| 115 | BLOCCO RESISTENZE | HEATING ELEMENTS LOCK | BLOCAGE ÉLÉMENTS CHAUFFANTS | HEIZELEMENTEBLOCKIERUNG | 683.007.00 | 1 | 2 | | | |
| | | | | | 983.009.00 | | | 1 | 2 | |
| 116 | | | | | | | | | | |
| 117 | | | | | | | | | | |
| 118 | | | | | | | | | | |
| 119 | | | | | | | | | | |
| 120 | | | | | | | | | | |
| 121 | | | | | | | | | | |
| 122 | | | | | | | | | | |
| 123 | | | | | | | | | | |
| 124 | | | | | | | | | | |
| 125 | | | | | | | | | | |
| 126 | | | | | | | | | | |
| 127 | | | | | | | | | | |
| 128 | | | | | | | | | | |
| 129 | | | | | | | | | | |
| 130 | | | | | | | | | | |
| 131 | | | | | | | | | | |
| 132 | | | | | | | | | | |
| 133 | | | | | | | | | | |
| 134 | | | | | | | | | | |
| 135 | | | | | | | | | | |
| 136 | | | | | | | | | | |
| 137 | | | | | | | | | | |